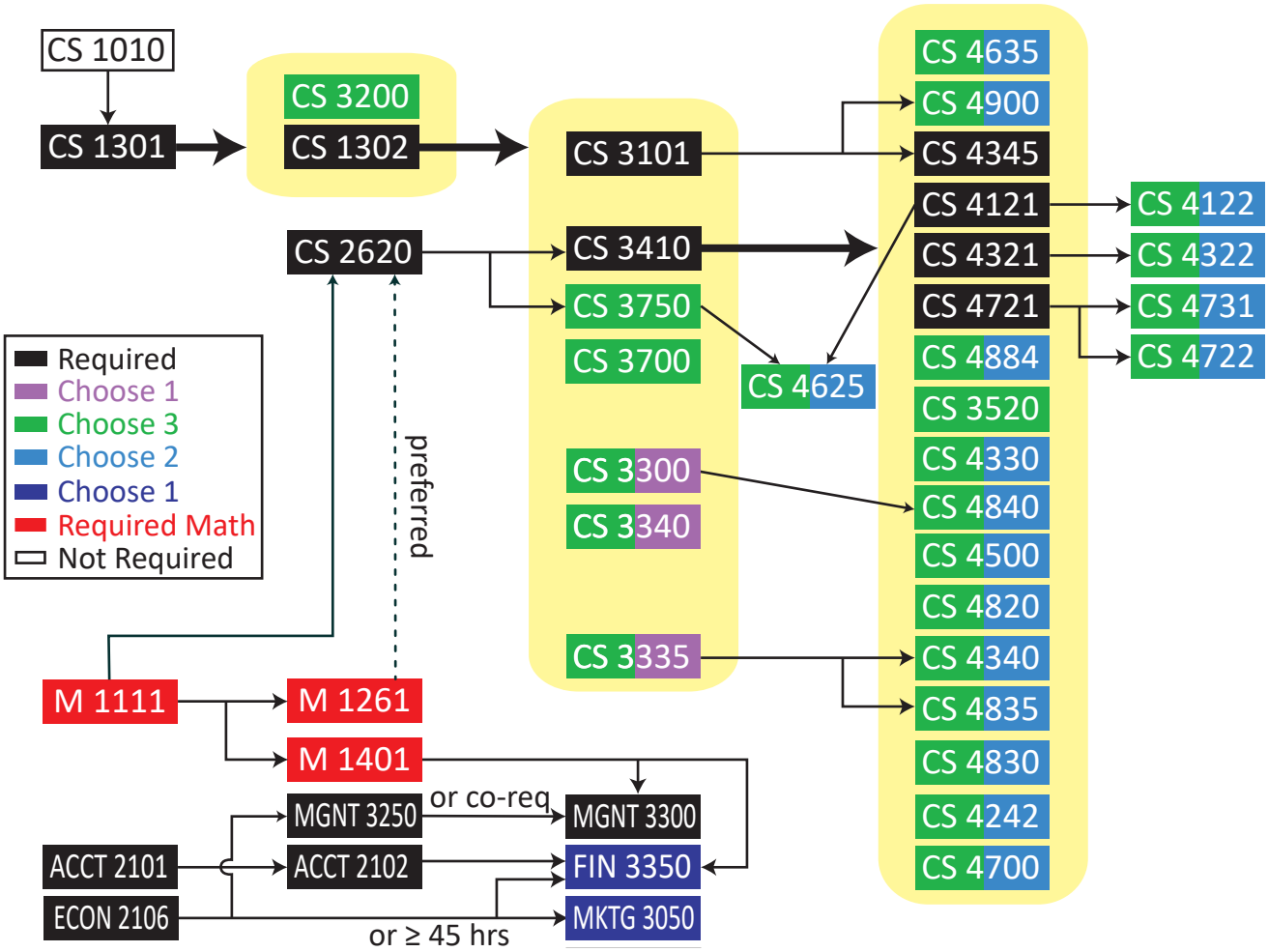BS in Computer Information Systems